29 121 000 **GROHTHERM SMARTCONTROL THERMOSTAT FOR CONCEALED INSTALLATION WITH 3 VALVES**

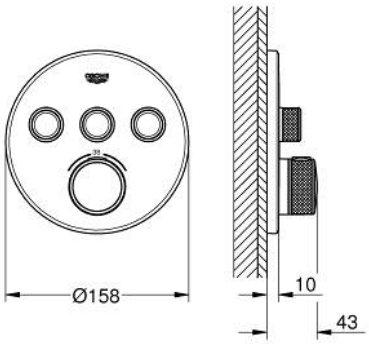

PRODUCT DESCRIPTION

- Colour: Chrome
- set for final installation for
- GROHE Rapido SmartBox 35 600/35 604
- metal wall escutcheon with GROHE FastFixation (covered escutcheon and shaft sealing, covered fixing), retroactively 6° adjustable
- GROHE Long-Life finish
- GROHE SmartControl push for ON-OFF, turn for volume adjustment from GROHE Water Saving to Full Flow
- exchangeable symbols
- GROHE TurboStat compact cartridge with wax thermoelement
- GROHE ProGrip with knurl structure
- GROHE SafeStop safety button at 38°C(calibration required)
- GROHE SafeStop Plus optional temperature limiter at 43°C or 46°C included
- built-in non return valve and dirt strainers
- multiple outlets can be run simultaneously
- without roughing-in-set
- flow performance: outlet A = 23 l/min outlet B = 27 l/min outlet C = 23 l/min outlet A + B = 33 l/min outlet A + B + C = 36 l/min

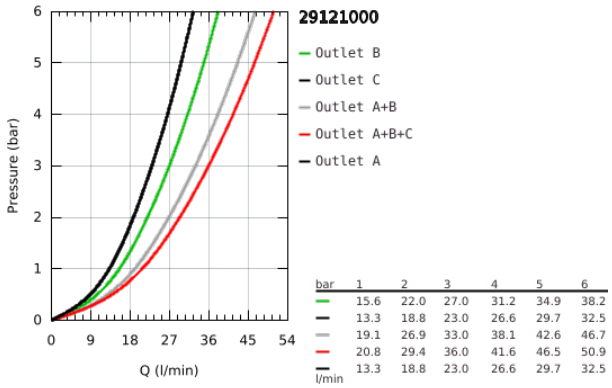

29 121 000 **GROHTHERM SMARTCONTROL THERMOSTAT FOR CONCEALED INSTALLATION WITH 3 VALVES**

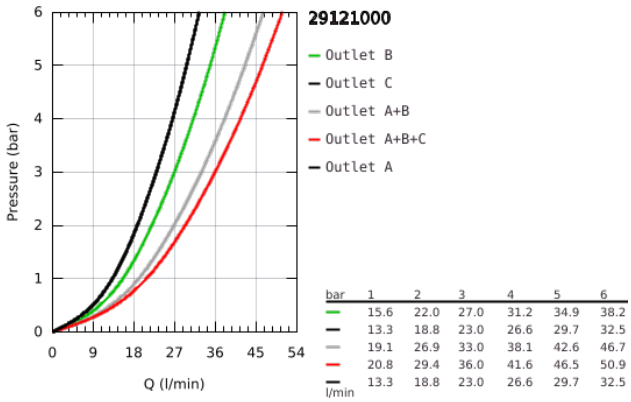

bar	1	2	3	4	5	6
	15.6	22.0	27.0	31.2	34.9	38.2
	13.3	18.8	23.0	26.6	29.7	32.5
	19.1	26.9	33.0	38.1	42.6	46.7
	20.8	29.4	36.0	41.6	46.5	50.9
l/min	13.3	18.8	23.0	26.6	29.7	32.5

29 121 000 **GROHTHERM SMARTCONTROL THERMOSTAT FOR CONCEALED INSTALLATION WITH 3 VALVES**

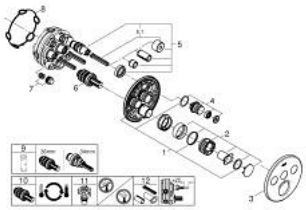

SPARE PARTS, January 2020 – now

1: Mounting plate (Spare part-nr. 48362000)

2: Temperature control handle (Spare part-nr. 49029000)

3: Escutcheon (Spare part-nr. 49035000)

4: WC push button (Spare part-nr. 48361000)

5: Cartridge (Spare part-nr. 48359000)

5.1: Spindle (Spare part-nr. 49088000)

6: Thermostatic compact cartridge 3/4" (Spare part-nr. 49028000)

7: Non-return valves (Spare part-nr. 47979000)

8: Sealing washer (Spare part-nr. 48360000)

9: Socket Spanner (Spare part-nr. 49059000)*

10: GROHE TurboStat cartridge 3/4" (Spare part-nr. 49003000)*

11: Service stops (Spare part-nr. 1405300M)*

12: Universal extension set single-lever mixers, 25 mm (Spare part-nr. 14048000)*

* Optional accessories