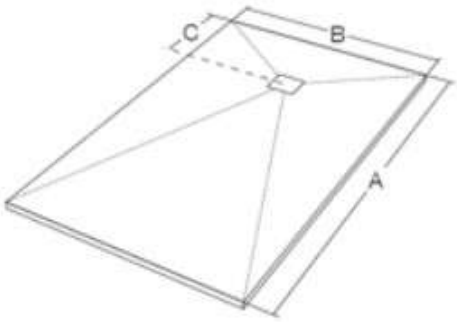

B \ A	80	90	100	110	120	130	140	150	160	170	180	190	200	C
70	40	40	40	40	40	40	40	40	40	40	40	50	50	
80	40	40	40	40	40	40	40	40	40	40	40	50	50	
90		45	40	40	40	40	40	40	40	40	40	50	50	