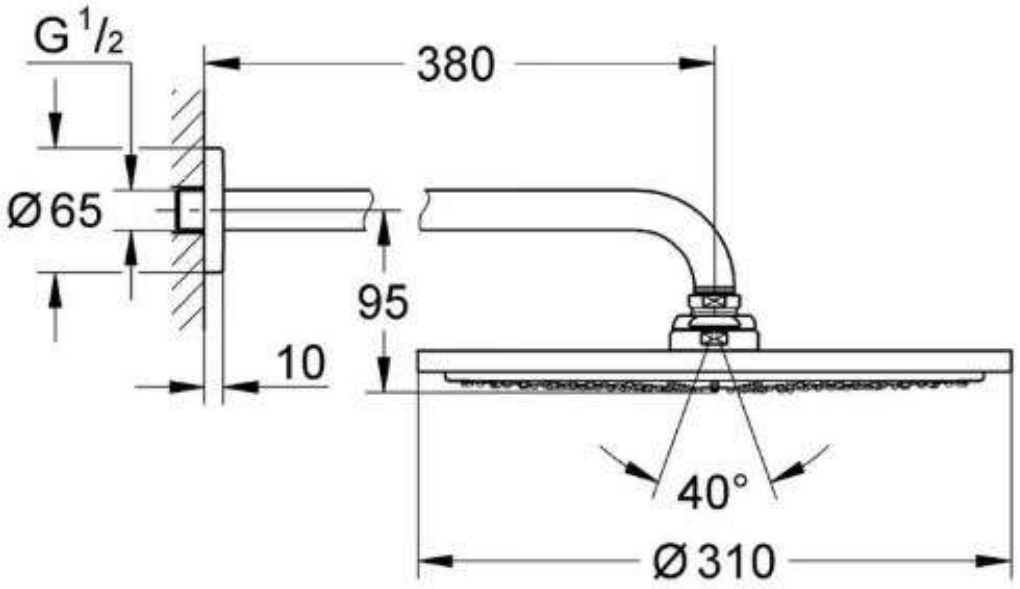
G 1/2
380
Ø65
95
10
40°
Ø310